Breconcherry Cleaning Technology

Tank cleaner_Turbodisc

Operating instruction (Translation from the original language)

430BAL015309EN_3

COPYRIGHT

These Operating Instructions are the English translation of the original operating instructions in the sense of the EU Machinery Directive. This document is protected by copyright. All rights reserved. The document may not, in whole or in part, be copied, reproduced, translated or reduced to an electronic medium of machine-readable form without the express permission of Breconcherry Ltd.

LEGAL NOTICE

–

TABLE OF CONTENTS

1 General Information 5
1.1 Information on the Document 5
1.1.1 Binding Character of These Operating Instructions 5
1.1.2 Notes on the Illustrations 5
1.1.3 Symbols and Highlighting 5
1.2 Manufacturer address 6
1.3 Contact 6
1.4 EC Declaration of Integration for Partially Completed Machines 7
2 Safety 8
2.1 Intended use 8
2.1.1 Requirements for operation 8
2.1.2 Improper operating conditions 8
2.2 Operator’s Duty of Care 8
2.3 Subsequent changes 9
2.4 General safety instructions and dangers 9
2.4.1 Principles for safe operation 9
2.4.2 Environmental Protection 10
2.5 Supplementary regulations 10
2.6 Qualification of personnel 10
2.7 Safety equipment 12
2.7.1 Signs 12
2.8 Residual dangers 13
2.9 Danger zones 13
3 Description 15
3.1 Design 15
3.2 Functional description 16
4 Transport and storage 17
4.1 Storage conditions 17
4.2 Transport 17
4.2.1 Scope of supply 17
5 Technical data 18
5.1 Identification 18
5.2 Technical data 18
5.3 Tool 19
5.4 Weights 19
6 Assembly and installation 20
6.1 Use and operation 20
6.2 Safety precautions 20
6.3 Notes on installation 20
6.4 Removing 20
7 Start-up 21
7.1 Safety precautions 21
7.2 Commissioning 21
8 Operation and control 22
8.1 Safety notes 22
8.2 Operating conditions 22
9 Servicing 23
9.1 Safety precautions 23
9.2 Servicing intervals 23
9.3 Disassembly 24
9.3.1 Removing the Turbodisc 24
9.4 Installation 24
9.4.1 Tightening torques 24
9.4.2 Mounting the Turbodisc 25
10 Alarms 27
10.1 Malfunctions and remedies 27
11 Decommissioning 28
11.1 Safety notes 28
11.2 Disposal 28

11.2.1 General notes 28
12 Spare parts list - Turbodisc 29
13 Appendix 30
13.1 Lists 30
13.1.1 Abbreviations and terms 30

1 General Information

1.1 Information on the Document

The present Operating Instructions are part of the user information for the product. The Operating Instructions contain all the information you need to transport, install, commission, operate and carry out maintenance for the product.

1.1.1 Binding Character of These Operating Instructions

These Operating Instructions contain the manufacturer's instructions to the operator of the product and to all persons who work on or use the product regarding the procedures to follow.

Carefully read these Operating Instructions before starting any work on or using the product. Your personal safety and the safety of the product can only be ensured if you act as described in the Operating Instructions.

Store the Operating Instructions in such a way that they are accessible to the operator and the operating staff during the entire life cycle of the product. When the location is changed or the product is sold make sure you also provide the Operating Instructions.

1.1.2 Notes on the Illustrations

The illustrations in these Operating Instructions show the product in a simplified form. The actual design of the product can differ from the illustration. For detailed views and dimensions of the product please refer to the design documents.

1.1.3 Symbols and Highlighting

In these Operating Instructions, important information is highlighted by symbols or special formatting. The following examples illustrate the most important types of highlighting.

Danger

Warning: Fatal Injuries

Failure to observe the warning can result in serious damage to health, or even death.

► The arrow identifies a precautionary measure you have to take to avoid the hazard.

Warning: Explosions

Failure to observe the warning can result in severe explosions.

► The arrow identifies a precautionary measure you have to take to avoid the hazard.

Warning!

Warning: Serious Injuries

Failure to observe the warning can result in serious damage to health.

► The arrow identifies a precautionary measure you have to take to avoid the hazard.

Caution!

Warning: Injuries

Failure to observe the warning can result in minor or moderate damage to health.

► The arrow identifies a precautionary measure you have to take to avoid the hazard.

Notice

Warning: Damage to Property

Failure to observe the warning can result in serious damage to the component or in the vicinity of the component.

► The arrow identifies a precautionary measure you have to take to avoid the hazard.

Carry out the following steps: = Start of a set of instructions.

1. First step in a sequence of operations.
2. Second step in a sequence of operations.

   → Result of the previous operation.

→ The operation is complete, the goal has been achieved.

Hint!

Further useful information.

1.2 Manufacturer address

Breconcherry Ltd.
Westfalia House, Old Wolverton Road
Milton Keynes, MK12 5PY, United Kingdom

1.3 Contact

Tel.:+44 (0)1531 632476
Fax:+44 (0)1531 633839

info@breconcherry.com
http://www.breconcherry.com

1.4 EC Declaration of Integration for Partially Completed Machines

Einbauerklärung
Declaration of Incorporation

im Sinne der EG-Maschinenrichtlinie 2006/42/EG
as defined by Machinery Directive 2006/42/EC

Hiermit erklären wir, dass es sich bei dieser Lieferung um die nachfolgend bezeichnete - jedoch unvollständige - Maschine handelt und dass ihre Inbetriebnahme solange untersagt ist, bis festgestellt wurde, dass die Maschine, in die diese Maschine eingebaut werden soll, den Bestimmungen der EG-Maschinenrichtlinie entspricht.

We herewith declare that this consignment contains the subsequently described - but incomplete - machine and that commissioning is suspended until it is established that the machine in which the machine concerned will be installed conforms to the regulations of the EC-Machine Directive

Wir erklären, dass die hier beschriebene unvollständige Maschine den “grundlegenden Sicherheits- und Gesundheitsschutzanforderungen” aus Anhang I, Abschnitt 1. und Abschnitt 2.1 erfüllt. Die technischen Unterlagen wurden gemäß Anhang VII, Teil B erstellt. Auf begründetes Verlangen werden die Unterlagen einzelstaatlichen Stellen zur Verfügung gestellt.

We declare that the subsequently described incomplete machine fulfills the “Essential Health and Safety Requirements” from Annex I part 1. and part 2.1. The technical documentation is compiled in accordance to part B of Annex VII. In response to reasoned request the relevant information will be transmitted to the national authorities.

Bei einer nicht mit uns abgestimmten Änderung an der Maschine verliert diese Erklärung ihre Gültigkeit.

This declaration becomes invalid in case of alterations at the machine which have not been agreed with us.

Bezeichnung der Maschine / machine´s designation:	Turbodisc	25 / 75 / 100 / 150
	Chemidisc	25 / 75 / 100 / 150
Maschinentyp: Machine type:	Breconcherry rotierende Reiniger Breconcherry rotating cleaner	
Einschlägige EG-Richtlinien: Relevant EC-Directives:	2006/42/EG 2006/42/EC	
Angewendete harmonisierte Normen: Applicable, harmonized standards:	DIN EN ISO 12100 DIN EN ISO 12100	

Buckinghamshire, 26.04.2017

Ilija Aprcovic
Geschäftsführer/Managing Director

Breconcherry Ltd

Old Wolverton Road
Milton Keynes
Buckinghamshire MK12 5PY
United Kingdom

2 Safety

2.1 Intended use

The free-rotating Turbodisc series cleaners are intended for cleaning tanks and containers. This cleaner are designed for the installation and operation at any angle. Using the device for any other purpose is considered contrary to its designated use.

Hint!

The manufacturer will not accept any liability for damage resulting from any use of the cleaner which is not in accordance with its designated use. The risk is borne solely by the operating company.

2.1.1 Requirements for operation

The prerequisite for reliable and safe operation of the component is proper transportation and storage as well as professional installation and assembly. Operating the unit within the limits of its designated use also involves adhering to the operating, inspection and maintenance instructions.

2.1.2 Improper operating conditions

The operational reliability of the cleaner cannot be ensured under improper operating conditions. Therefore avoid improper operating conditions.

Operating the cleaner is not permitted if

- Persons or objects are in the danger zone.
- Safety devices are not working or were removed.
- Malfunctions have been detected on the cleaner.
- Damage has been detected on the cleaner.
- Maintenance intervals have been exceeded.

2.2 Operator’s Duty of Care

In your capacity as operator of the facility you bear a particular responsibility for the proper and safe handling of the cleaner in your facility. Only use the cleaner when it is in perfect condition to prevent danger to persons and property.

These Operating Instructions contain the information you and your staff need for the safe and reliable operation during the entire service life of the cleaner. Be sure to read these Operating Instructions carefully and ensure that the measures described here are observed.

The operator's duty of care includes planning the necessary safety measures and monitoring that these measures are observed. The following principles apply:

- Only allow qualified staff to work on the cleaner.
- The operating company must authorize personnel to carry out the relevant tasks.

- Working areas and the entire environment of the cleaner must be neat and clean.
- Personnel must wear suitable work clothing and personal protective equipment. As the operating company must ensure that work clothing and personal protective equipment are used.
- Inform personnel regarding any properties of the product which might pose a health risk and the preventative measures to be taken.
- Have a qualified first-aid representative on call during the operation. This person must be able to initiate any necessary first-aid measures in case of an emergency.
- Clearly define processes, lines of authority and responsibilities associated with the cleaner. Everybody must know what to do in case of an emergency. Instruct the staff in this respect at regular intervals.
- The signs relating to the cleaner must always be complete and legible. Check, clean and replace the signs as necessary at regular intervals.
- Observe the Technical Data specified and the limits of use!

Hint!

Carry out regular checks. This way you can ensure that these measures are actually observed.

2.3 Subsequent changes

You should never make any technical modifications to the cleaner. Otherwise you will have to undergo a new conformity process in accordance with the EC Machinery Directive on your own.

In general, only original Breconcherry Ltd. spare parts should be fitted. This ensures the reliable and economical operation of the cleaner. Using spare parts from third-party suppliers will invalidate any and all warranty claims.

2.4 General safety instructions and dangers

The cleaner is operationally reliable. It was built according to state-of-the-art science and technology.

Nevertheless, the cleaner can pose dangers, especially if

- the cleaner is not used in accordance with its intended use,
- the cleaner is not used correctly,
- the cleaner is operated under impermissible operating conditions.

2.4.1 Principles for safe operation

Dangerous situations during operation can be avoided by safety-conscious and proactive behaviour of the personnel.

To ensure the safe operation of the cleaner the following principles apply:

- The Operating Instructions must be kept ready to hand and accessible for everyone at the cleaner's place of use. They must be complete and in clearly legible form.
- Only use the cleaner for its intended use.
- The cleaner must be functional and in good working order. Check the condition of the cleaner before starting work and at regular intervals.
- Wear tight-fitting work clothing for all work on the cleaner.
- Ensure that nobody can get hurt on the parts of the cleaner.
- Immediately report any faults or noticeable changes on the cleaner to the person responsible.
- Never touch the pipes and the cleaner when these components are hot! Avoid opening the cleaner, unless the process units have been emptied and depressurised.
- Observe the accident prevention regulations and all local regulations.

2.4.2 Environmental Protection

Harm to the environment can be avoided by safety-conscious and proactive behaviour of the staff.

For environmental protection the following principles apply:

- Substances harmful to the environment must not be discharged into the ground or the sewage system.
- Always observe the pertinent regulations relating to waste avoidance, disposal and utilization.
- Substances harmful to the environment must be collected and stored in suitable containers. Clearly mark the containers.
- Dispose of lubricants as hazardous waste.

2.5 Supplementary regulations

In addition to the instructions in this documentation the following also has to be observed:

- pertinent accident prevention regulations,
- generally accepted safety rules,
- national regulations applicable in the country of use,
- work and safety instructions applicable in the facility,
- installation and operating regulations for use in potentially explosive areas.
- For use in Ex-protected areas, special safety and operating instructions apply. For this purpose, Breconcherry supplies a separate ATEX supplementary operating manual, which must be observed.

2.6 Qualification of personnel

This section contains information about the qualifications that staff working on the cleaner must have.

Operating and maintenance personnel must

- have the necessary qualification to carry out their tasks,
- be instructed with regard to possible dangers,
- know and observe the safety instructions given in the documentation.

Only allow qualified electricians to carry out work on the electrical equipment or have a qualified electrician supervise the work.

Only allow specially trained personnel to carry out work on an explosion-protected system. When working on explosion-protected equipment observe the standards DIN EN 60079-14 for gases and DIN EN 50281-1-2 for dusts.

The following minimum qualifications are required:

- Vocational training as a skilled worker who can work on the cleaner independently.
- Sufficient instruction to work on the cleaner under the supervision and direction of a qualified specialist.

Each member of staff must meet the following requirements to be allowed to work on the cleaner:

- Personal suitability for the respective task.
- Sufficient professional qualification for the respective task.
- Instructed with regard to the function of the cleaner.
- Instructed with regard to the operating sequences of the cleaner.
- Familiar with the safety devices and their function.
- Familiar with these Operating Instructions, especially with the safety instructions and the information which is relevant for the task on hand.
- Familiar with the basic regulations with regard to occupational health and safety and accident prevention.

For work to be carried out on the cleaner the following user groups are distinguished:

User groups	
Staff	**Qualifications**
Operating personnel	Adequate instruction and sound knowledge in the following areas: • Function of the cleaner • Operating sequences of the cleaner • What to do in case of an emergency • Lines of authority and responsibilities with respect to the task
Maintenance personnel	Adequate instruction as well as sound knowledge of the design and function of the cleaner. Sound knowledge in the following areas: • Mechanical equipment • Electrical equipment • Pneumatic system Authorization with regard to safety engineering standards to carry out the following tasks: • Setting devices into operation • Earthing of devices • Marking of devices The relevant certificates of qualification must be submitted before work can be carried out on ATEX certified machines.

2.7 Safety equipment

2.7.1 Signs

Dangerous points on the cleaner are indicated by warning signs, prohibition signs and mandatory signs.

The signs and notes on the cleaner must always be legible. Any illegible signs must be replaced immediately.

Signs on the cleaner	
Sign	**Meaning**
Fig.1	General hazard warning
Fig.2	Warning crushing

2.8 Residual dangers

Dangerous situations can be avoided by safety-conscious and proactive behaviour of the personnel and by wearing personal protective equipment.

Residual dangers on the cleaner and measures		
Danger	**Cause**	**Measure**
Danger to life	Inadvertent switch-on of the cleaner	Effectively disconnect all components, effectively prevent switch-on.
Risk of injury	Danger presented by moving or sharp-edged parts	The operator must exercise caution and prudence. For all work: • Wear suitable work clothing. • Never operate the machine if the cover panels are not correctly fitted. • Never open the cover panels during the operation. • Never reach into openings. As a precautionary measure, wear personal protective equipment in the vicinity of the cleaner: • Protective gloves • Safety shoes

2.9 Danger zones

Transport, installation

Store the cleaner in horizontal position and secure it against rolling away to the side.

Commissioning

Please observe the following notes:

- When installing the cleaner, secure it against tipping and twisting and secure all fixing points correctly.
- Only set the cleaner into operation in closed vessels.

Operation

Please observe the following notes:

- Provide suitable protective measures to ensure that the cleaner cannot be set into operation outside of the vessel.
- In the event of faults, stop all media supplies immediately.
- Check the installation situation to ensure that the cleaner is not in contact with other parts and that rotation cannot be obstructed.
- Do not allow the maximum cleaning pressure and the maximum cleaning temperature to be exceeded.
- Vessels, tanks and road tankers etc. must be grounded by suitable means.

Maintenance

Please observe the following notes:

- Close all media supply lines and ensure that no hot or aggressive media are applied to or are in the cleaner.

3 Description

3.1 Design

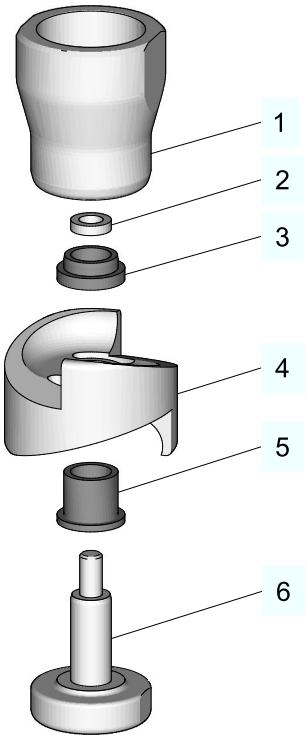

Fig.3

Design	
No.	**Designation**
1	Inlet
2	Wedge lock washers
3	Seal ring
4	Rotor
5	Bush
6	Cap

Hint!

Structure of the Turbodisc 25 deviates.

3.2 Functional description

The cleaner is driven by the cleaning liquid flowing through it at a suitable pressure and flow rate. The rotor rotates on a cleaning liquid bearing. It is essential that the cleaner is supplied with cleaning liquid at the correct pressure and flow rate for effective operation. The corresponding values can be found in the the table “8.2 Operating conditions”.

- Hygienic and compact design
- No ball bearings
- Long service life
- Fast, highly efficient drop cleaning
- Immediate wetting of the inside wall of the tank
- Comparably low flow
- Variable spray patterns: 360° and 180°

4 Transport and storage

4.1 Storage conditions

Store the cleaner in a dry place and ensure it is not subjected to vibration and is protected from external influence.

Storage temperature +5...+40 °C

4.2 Transport

For transport, the following principles apply:

- Observe the pictograms on the package.
- Handle the cleaner with care to avoid damage caused by impact or careless loading and unloading. The outside synthetic materials are susceptible to breaking.
- Only allow qualified staff to transport the cleaner.
- Movable parts must be properly secured.

4.2.1 Scope of supply

On receipt of the cleaner, check whether

- the details on the type plate correspond to the data in the order and delivery documents,
- the equipment is complete and all components are in good order.

5 Technical data

5.1 Identification

The marking on the cleaner is used for the clear identification of the cleaner.

Hint!

Cleaners for use in explosive atmospheres (ATEX) have a different marking, which is explained in the associated ATEX Operating Instructions.

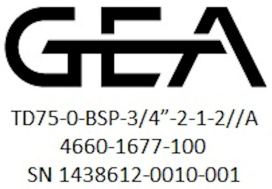

Fig.4

The label contains the following characteristics:

Characteristics of the cleaner	
Type code	e.g.TD75-0-BSP-3/4”-2-1-2//A//0
Part number	e.g. 4660-1677-100
Serial number	1438612-0010-001 The serial number is composed of: order confirmation number - item number - consecutive number.

5.2 Technical data

Standard materials	**Stainless steel 1.4404 / 316L** **PTFE or C.PTFE**
Standard connection:	BSP/NPT or Pin Fix – sizes in table 1
Operating temperature:	max. 95 °C (203 °F)
Ambient temperature:	max. 140 °C (284 °F)
Operating pressure range:	1...5 bar (14… 73 psi)
Tank opening:	Dimensions see table 1
Spray pattern:	360° or 180° top or 180° bottom Spray pattern drops with high impact force due to rotating rotor

Table 1

	Turbodisc 25	**Turbodisc 75**	**Turbodisc 100**	**Turbodisc 150**
BSP/NPT connection	¼" male thread	¾" female thread	1" female thread	1 ½" female thread
Min. tank opening [mm]	32	43	55	75
Pin Fix connection	½“ OD tube	1” OD tube	1” OD tube	1.5” OD tube
Min. tank opening [mm]	56	64	64	89

5.3 Tool

Tools used for several construction types	
Tools	**Material no.**
Plug-in adapter	408-491

TurboDisc 75	
Tool	**Material no.**
Torque wrench 2.5-25 Nm	408-494
Adjustable spanner insertion tool	408-492

TurboDisc 100	
Tool	**Material no.**
Torque wrench 10-60 Nm	4660-9000-100
Adjustable spanner insertion tool	408-492

TurboDisc 150	
Tool	**Material no.**
Torque wrench 10-60 Nm	4660-9000-100
Adjustable spanner AF52	408-493

5.4 Weights

Size	**Weight [g]**
Turbodisc 25	35
Turbodisc 75	350
Turbodisc 100	500
Turbodisc 150	1000

6 Assembly and installation

6.1 Use and operation

The Turbodisc tank cleaner is intended for the cleaning of tanks and vessels. This cleaner is designed for the installation and operation at any angle.

6.2 Safety precautions

The installation, operating and maintenance personnel must observe the national and locally applicable health and safety regulations and have sufficient qualification for the execution of their tasks. All safety precautions listed in the instruction manual must be observed.

When the cleaner is switched on, the danger zones must be free. Before the visual inspection, the cleaner must be switched off and secured against being switched back on. Ensure with suitable security measures ensure that the cleaner can never be operated outside the tank and that no persons can stay in the tank during operation.

6.3 Notes on installation

Hint!

Before connecting the tank cleaner ensure that all lines have been flushed thoroughly and are free from foreign bodies.

Observe the following points before installing the cleaner:

- Firmly hold the tank cleaner at the inlet and screw by hand onto the thread connection until it is secure. Subsequently use a suitable spanner for tightening it completely.

6.4 Removing

Remove in reverse sequence of installation.

Caution!

Hot surface of the cleaner

Danger of burns.

► Allow the cleaner to cool before removing it.

Caution!

Hot and aggressive liquids can be discharged from the cleaner.

Danger of injury.

► Completely drain the cleaner before removing it.

Sieve

We recommend installing a filter / a strainer (500 µm) in the CIP feed line on the tank cleaner to protect the same from clogging with particles or damage.

7 Start-up

7.1 Safety precautions

Initial commissioning

For initial commissioning, the following principles apply:

- The cleaner must be completely assembled and correctly adjusted. All screw connections must be securely tightened.
- Reliably secure machine parts which have already been connected against inadvertently being switched on.
- After each change of the cleaner by the customer, the residual risks must be re-evaluated.

Commissioning

For commissioning, the following principles apply:

- Only allow properly qualified staff to set the cleaner into operation.
- Make sure all connections are properly established.
- There should be no persons in the area around the tank for health and safety reasons. The area must be clear to avoid possible accidents / injuries.
- Remove any liquids that have escaped without leaving residues. Do not leave any residues of leaking liquid on or inside the cleaner.

7.2 Commissioning

Prerequisite:

- Avoid water hammers in the supply pipe.

Caution!

Hot and aggressive liquids are discharged from the cleaner!

Risk of injury

► Make sure nobody stands in the area of action of the nozzles.
► The cleaner may only be operated in a container intended for this purpose.

Carry out the following steps:

1. Connect the cleaner and set it into operation.

- Done.

Hint!

Noise generated when the cleaning jets hit the tank wall can cause discomfort and stress in the immediate vicinity.

8 Operation and control

8.1 Safety notes

Dangerous situations during operation can be avoided by safety-conscious and proactive behaviour of the personnel.

For operation, the following principles apply:

- Monitor the cleaner during the operation.
- Safety devices must not be changed, removed or taken out of service. Check all safety devices at regular intervals.
- All guards and hoods must be fitted as intended.
- The place of installation of the cleaner must be adequately ventilated at all times.
- Structural alterations of the cleaner are not permitted. Immediately report any changes on the cleaner to the person responsible.
- Always keep danger zones clear. Do not leave any objects in the danger zone. Only allow persons to enter the danger zone when the machine is de-energized.
- Regularly check that all emergency stop devices are working correctly.

8.2 Operating conditions

Operating flow and pressure conditions								
Pressure* [bar]**	**Flow rate [m³/h]**							
	Turbodisc 25		**Turbodisc 75**		**Turbodisc 100**		**Turbodisc 150**	
	BSP/NPT	**Pin Fix**	**BSP/NPT**	**Pin Fix**	**BSP/NPT**	**Pin Fix**	**BSP/NPT**	**Pin Fix**
1	2	2.1	3.5	3.7	4.9	5.1	6.9	7.4
2	2.6	2.9	5	5.2	7	7.3	9.9	10.4
3	3.2	3.5	5.8	6.3	8.5	8.8	11.6	12.2
4	3.65	4.1	6.5	7	9.7	10.2	13	13.7
5	4.1	4.6	7.1	7.7	10.6	11	14.3	15.2

*** The specified pressure is the pressure required at the cleaning head and not at the pump.**
**** All pressure data [bar] is assumed to be gauge pressure [barg] unless explicitly specified otherwise.**

9 Servicing

The Turbodisc 25 does not require maintenance. It should be subjected to a visual check and inspected at regular intervals and replaced if necessary. It cannot be dismantled and reassembled. Maintenance must be carried out on Turbodisc 75, 100 and 150. They should be subjected to a visual check at regular intervals and maintained if necessary, see Section 9.2, Page 23.

9.1 Safety precautions

Maintenance and repair

For maintenance and repair, the following principles apply:

- Observe the intervals specified in the maintenance schedule.
- Only allow qualified staff to carry out maintenance or repair work on the cleaner.
- Before starting any maintenance or repair work, the cleaner must be switched off and secured against being switched back on. Work may only be started once any residual energy has been discharged.
- Block access for unauthorized persons. Put up notice signs which draw attention to the maintenance or repair work going on.
- Wear suitable protective clothing.
- Only use suitable and undamaged tools to carry out maintenance work.
- Before setting the unit back into operation refit all safety devices as originally provided in the factory. Then check that all safety devices are working correctly.
- Check pipes are firmly secured, also check for leaks and damage.
- Check that all emergency stop devices are working correctly.

Disassembly

For removal, the following principles apply:

- Only allow qualified staff to disassemble the cleaner.
- Before starting disassembly, the cleaner must be switched off and secured against being switched back on. Work may only be started once any residual energy has been discharged.
- Disconnect all power and utility lines.
- Markings must not be removed.
- Pack sensitive parts separately.

9.2 Servicing intervals

The practical servicing intervals can only be determined by the user since they depend on the operating conditions.

For example, they depend on

- type and temperature of the cleaning solution,

- ambient conditions.

Servicing intervals	
Applications	**Servicing intervals (guideline values)**
Inspection	175 hours of operation
Maintenance	350 hours of operation

9.3 Disassembly

9.3.1 Removing the Turbodisc

Carry out the following steps:

1. Clamp the cap (6) into a vice and loosen the inlet (1) with a jaw wrench and remove.

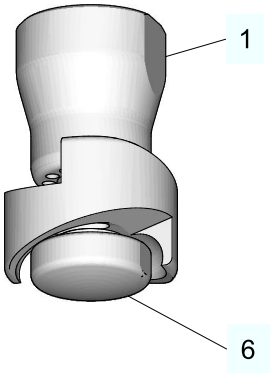

Fig.5

2. Pull the rotor off the cap and push the collar bearing out of the rotor.
3. Remove the seal ring and wedge lock washers from the inlet.

→ Cleaner is removed.

9.4 Installation

9.4.1 Tightening torques

When mounting the components of the cleaner, follow the torques specified in the table.

Tightening torques			
Cleaner size	**TurboDisc 75**	**TurboDisc 100**	**TurboDisc 150**
Spanner flat	30 mm	36 mm	52 mm
Torque	5 Nm	10 Nm	30 Nm

9.4.2 Mounting the Turbodisc

Carry out the following steps:

1. Insert a pair of wedge lock washers (2) into the inlet (1). It must be ensured that the interlocking always points outwards, fig. 6.
2. Insert the seal ring (3) into the inlet until it stops, fig. 7.

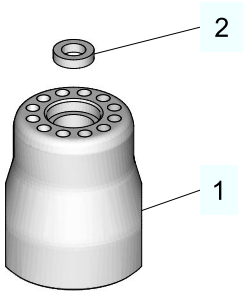

Fig.6: Inlet and wedge lock washers

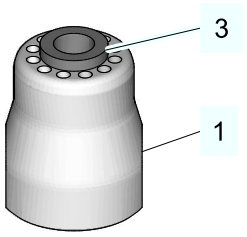

Fig.7: Inlet and seal ring

3. Press the bearing (5) from below into the rotor (4), fig. 8.
   It must be ensured that the correct side is chosen. This can be seen from the chamfer on the inner diameter.

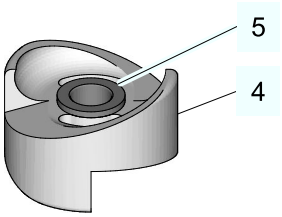

Fig.8: Rotor with bush

4. Lightly grease the entire area of the cap thread with the pitch thread.
5. Put the rotor (4) with the bearing side downwards onto the cap (6) and tighten the inlet (1) by hand.

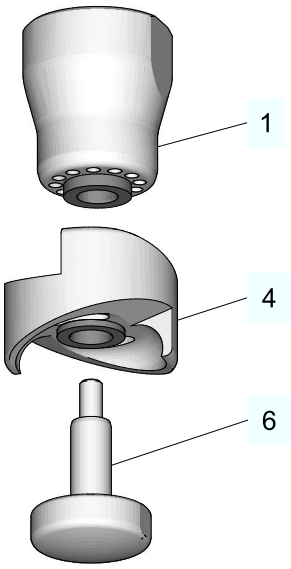

Fig.9: Rotor with cap

6. Clamp the cap (6) into a vice and loosen the inlet (1) with a torque wrench and remove. Observe torques, see Section 9.4.1, Page 24

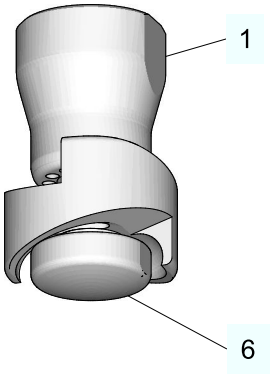

Fig.10: Mount vice

→ Cleaner is mounted.

10 Alarms

10.1 Malfunctions and remedies

In the event of malfunctions immediately deactivate the cleaner and secure it against inadvertent reactivation. Malfunctions may only be remedied by qualified staff, who must observe the safety instructions.

11 Decommissioning

11.1 Safety notes

For shutting down, the following principles apply:

- For longer periods of standstill, observe the storage conditions, see Chapter 4, Page 17.

11.2 Disposal

11.2.1 General notes

Dispose of the cleaner in an environmentally friendly manner. Observe the statutory waste disposal regulations applicable at the place of installation.

Separate the different materials and dispose of them correctly sorted. Also observe the instructions regarding disposal in the operating instructions for the individual components.

12 Spare parts list - Turbodisc

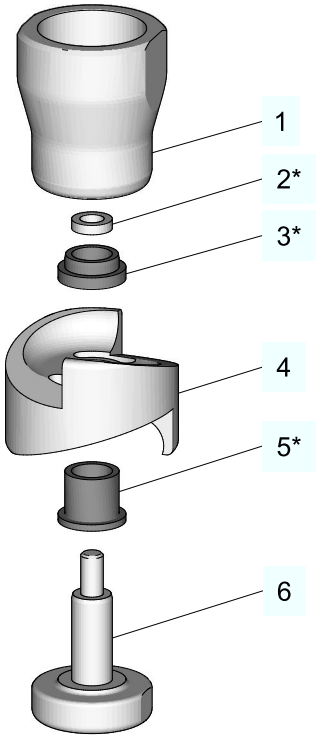

Fig.11

Item no.	Designation	Quantity
1	Inlet	1
2*	Wedge lock washer	1
3*	Seal ring	1
4	Rotor	1
5*	Bush	1
6	Cap	1
Items marked with an * are wearing parts. They are only included in the wearing parts sets.		

Table wear parts set		
Designation	**Material**	**Material no.**
Turbodisc 75 C-PTFE	C-PTFE	4660-1677-888
Turbodisc 75 PTFE	PTFE	4660-1678-888
Turbodisc 100 C-PTFE	C-PTFE	4660-1611-888
Turbodisc 100 PTFE	PTFE	4660-1612-888
Turbodisc 150 C-PTFE	C-PTFE	4660-1662-888
Turbodisc 150 PTFE	PTFE	4660-1663-888
Attention: Wearing parts sets only fit for cleaners with one spanner flat at the cap (pos. 6)!		

13 Appendix

13.1 Lists

13.1.1 Abbreviations and terms

Abbreviation	Explanation
ATEX	ATEX is a widely used synonym for the European Union ATEX directives. The designation ATEX is derived from the abbreviation of the French ATmosphère EXplosive.
BS	British Standard
bar	Unit of measurement of pressure [bar] All pressure data expressed in [bar/psi] is assumed to be gauge pressure [barg/psig] unless explicitly specified otherwise.
BSP	British Standard Pipe Thread
approx.	approximately
°C	Unit of measurement of temperature [degree Celsius]
C-PTFE	Carbonated polytetrafluoroethylene
DN	DIN nominal width
DIN	German standard issued by DIN (Deutsches Institut für Normung e.V., German Institute for Standardization)
EN	European Standard
°F	Unit of measurement of temperature [degree Fahrenheit]
h	Unit of measurement of time [hour]
ISO	International Standard of the International Organization for Standardization
kg	Unit of measurement of weight [kilogram]
l	Unit of measurement of volume [litre]
min.	minimum
max.	maximum
mm	Unit of measurement of length [millimetre]
µm	Unit of measurement of length [micrometre]
M	Metric
NPT	National Pipe Thread
Nm	Unit of measurement of work [newton metre] SPECIFICATION FOR THE TORQUE: 1 Nm = 0.737 lbft Pound-Force (lb) + Feet (ft)
PA	Polyamide
PEEK	Polyether ether ketone

Abbreviation	Explanation
C-PEEK	Polyether ether ketone containing carbon
PTFE	Polytetrafluoroethylene
psi	Anglo-American unit of measurement for pressure [pound-force per square inch] All pressure data expressed in [bar/psi] is assumed to be gauge pressure [barg/psig] unless explicitly specified otherwise.
AF	Indicates the size of spanners [width across flats]
Inch	Unit of measurement of length in the Anglo-American language area
Inch OD	Tube measurement according to British Standard (BS), outside diameter
Inch IPS	American pipe measurement, iron pipe size

Transmitted by:

BRECONCHERRY

Innovative Reinigungssysteme

Breconcherry GmbH
Sägewerkstraße 3 · 83395 Freilassing · Germany
Phone +49 8654 7783-46
office@breconcherry.de · www.breconcherry.de
Tax number 163/122/81132 · VAT ID No. DE326553473

Manufacturer: **Breconcherry Ltd**
Westfalia House, Old Wolverton Road
Milton Keynes MK12 5PY · United Kingdom
Phone +44 1531 632476 · Fax +44 1531 633839
info@breconcherry.com · www.breconcherry.com